MS115

IDEAL

WCXP1920S33
WCXP1920S34
WCXP1920S35
WCXP1920S36

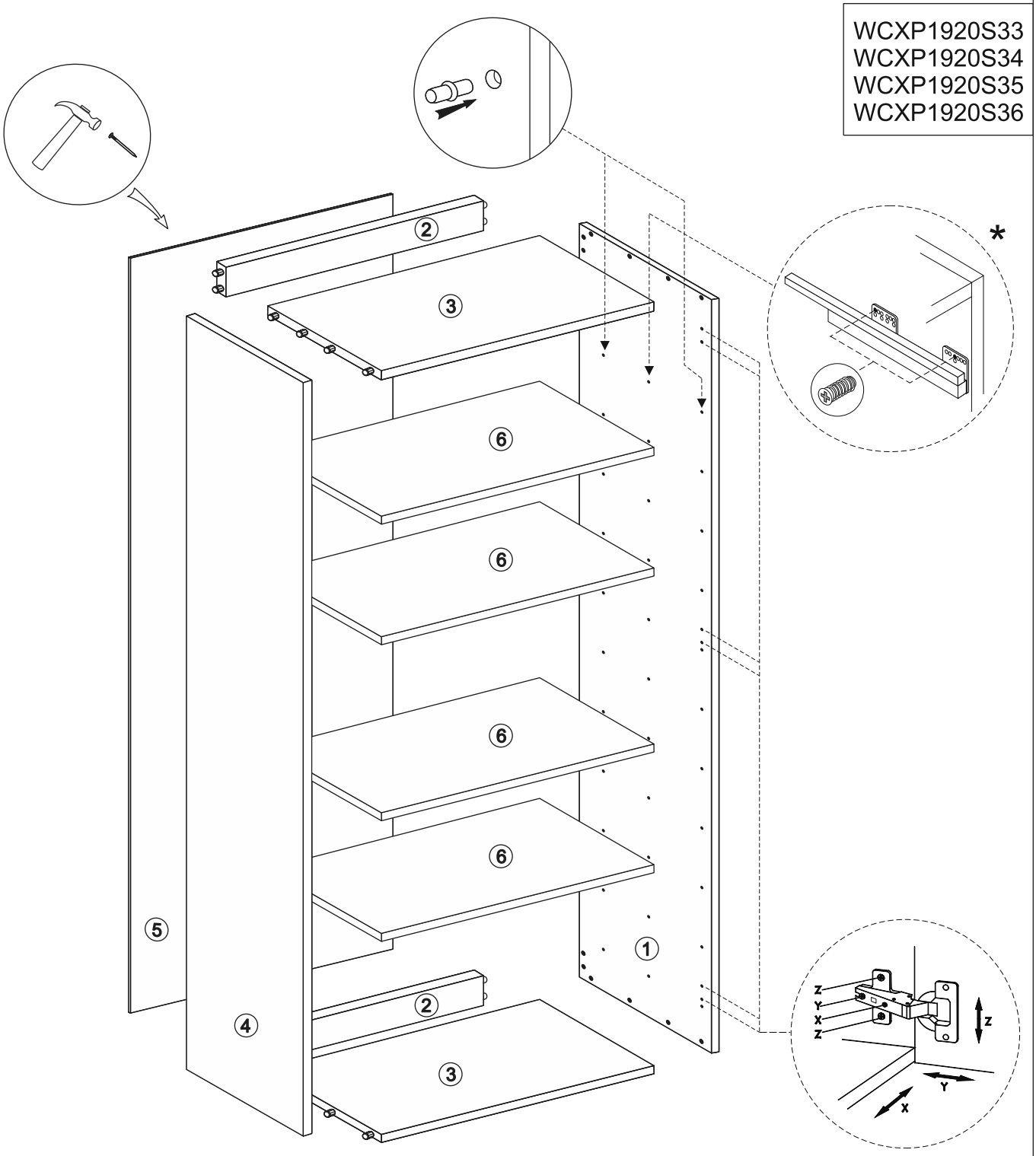

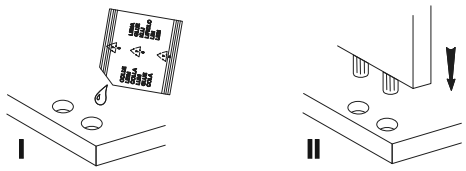

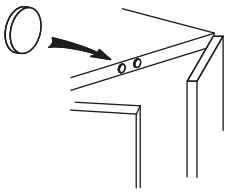

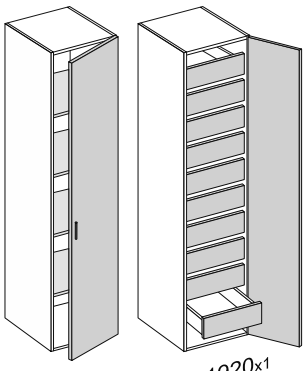

		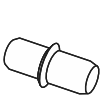	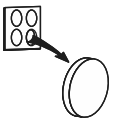	
HP-1	25x	1x	20x	4x